An ISO 9001:2015 Certified Co

Royal Industrial Suppliers

Quality Fasteners Specialist

No. 4, M.G.S. Complex, Benki Nawab Street, S.P. Road Cross, Bangalore 5600

8310165941 / 9008782885 sales@royalfastenersindia.com www.royalfastenersindia.com

FLANGED BOLT

DIN 6921

CATALOGUE NUMBER: R4D25F

AISI 304 - A2

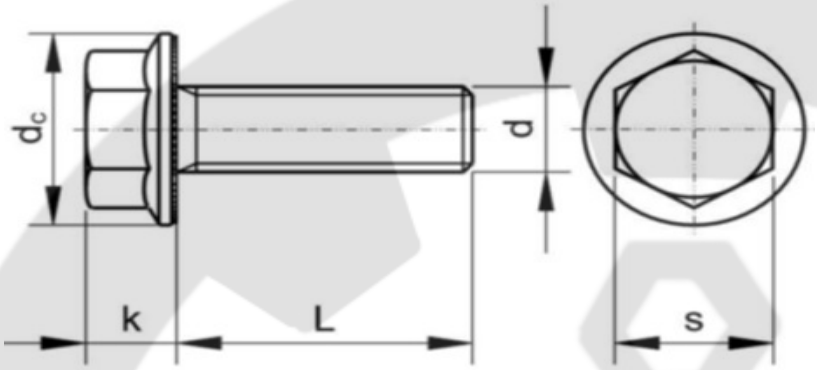

Note: Flange may be Plain or Serrated

Parameter↓ / Size →	M4x0.7	M5x0.8	M6x1.0	M8x1.25	M10x1.5	M12x1.75
dc	10	11.8	14.2	18	22.3	26.3
k	4.65	5.40	6.60	8.10	9.20	11.50
s	7.00	8.00	10.00	13.00	15.00	16.00
e	7.66	8.71	10.95	14.26	16.50	17.62

Send your Orders / Enquiries along with the following Item Codes All Dimensions are in MM

Len ↓ / Dia →	M4x0.7	M5x0.8	M6x1.0	M8x1.25	M10x1.5	M12x1.75
8	R4D25F04008	R4D25F05008				
10	R4D25F04010	R4D25F05010	R4D25F06010			
12	R4D25F04012	R4D25F05012	R4D25F06012	R4D25F08012		
16	R4D25F04016	R4D25F05016	R4D25F06016	R4D25F08016	R4D25F10016	
20	R4D25F04020	R4D25F05020	R4D25F06020	R4D25F08020	R4D25F10020	R4D25F12020
25	R4D25F04025	R4D25F05025	R4D25F06025	R4D25F08025	R4D25F10025	R4D25F12025
30	R4D25F04030	R4D25F05030	R4D25F06030	R4D25F08030	R4D25F10030	R4D25F12030
35	R4D25F04035	R4D25F05035	R4D25F06035	R4D25F08035	R4D25F10035	R4D25F12035
40	R4D25F04040	R4D25F05040	R4D25F06040	R4D25F08040	R4D25F10040	R4D25F12040
45	R4D25F04045	R4D25F05045	R4D25F06045	R4D25F08045	R4D25F10045	R4D25F12045
50	R4D25F04050	R4D25F05050	R4D25F06050	R4D25F08050	R4D25F10050	R4D25F12050
55			R4D25F06055	R4D25F08055	R4D25F10055	R4D25F12055
60			R4D25F06060	R4D25F08060	R4D25F10060	R4D25F12060
65				R4D25F08065	R4D25F10065	R4D25F12065
70				R4D25F08070	R4D25F10070	R4D25F12070
80				R4D25F08080	R4D25F10080	R4D25F12080
90					R4D25F10090	R4D25F12090
100					R4D25F10100	R4D25F12100
110						R4D25F12110
120						R4D25F12120